Manual

EVOLVE FS ASSEMBLY INSTRUCTIONS

Congratulations on purchasing an Evolve FS frame set. In the following instructions, we will guide you step by step through the assembly of your new bike. Proper assembly is essential to fully realize the potential of this product and, more importantly, to ensure a safe ride. Otherwise, serious injury or even death may occur. Therefore, we strongly recommend having your bike assembled by a qualified bicycle mechanic.

The assembly of your bike should follow the steps described in this document.

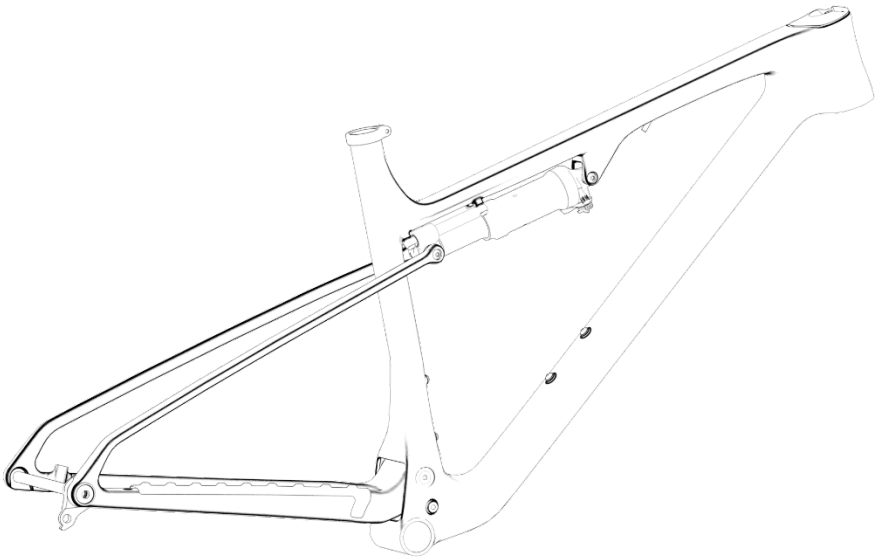

Evolve FS frameset

Before starting

Make sure you have all the necessary tools and the required expertise to perform the described steps. All screws must be tightened using a calibrated torque wrench. When mounting third-party components, ensure that they correspond to the compatibility list at the end of this manual and follow the manufacturer's instructions.

Seat post installation

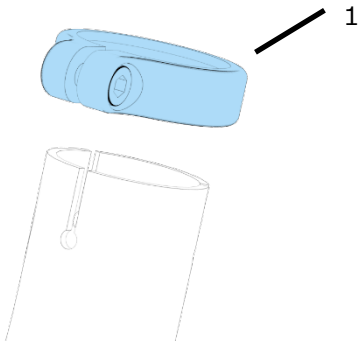

Pos.	Description	Part. No.	Torque
1	ARC8 Seatclamp 34.9		6 Nm

If you are working with a clamp-type workstand, installing the seat post should be your first step. Clamping any tube other than the seat post might damage the frame. For tasks that require big torques, like tightening the BB, the frame needs to stand either on the ground (with wheels installed), or a BB/axle mount type workstand.

1. When installing the seatpost, use friction paste, no grease
2. Tighten the seat clamp with 6 Nm maximum

Cable routing

Before installing the cables, we recommend having the fork prepared (steerer cut to correct length, crown race and starnut installed).

We recommend installing all cables from the rear, working towards the headset. First install the dropper post cable housing. This is done best with the help of a magnetic tool like the Park Tool IR-1.2. pull it out through the top of the head tube and leave it there.

Now install the RD cable housing and rear brake hose. Just push them through the guide tube in the chain stays. The cables will be guided into the down tube. Also pull them out through the top of your head tube and leave them there.

Push the foam tubes over the housings into the down tube to avoid rattling.

Headset installation

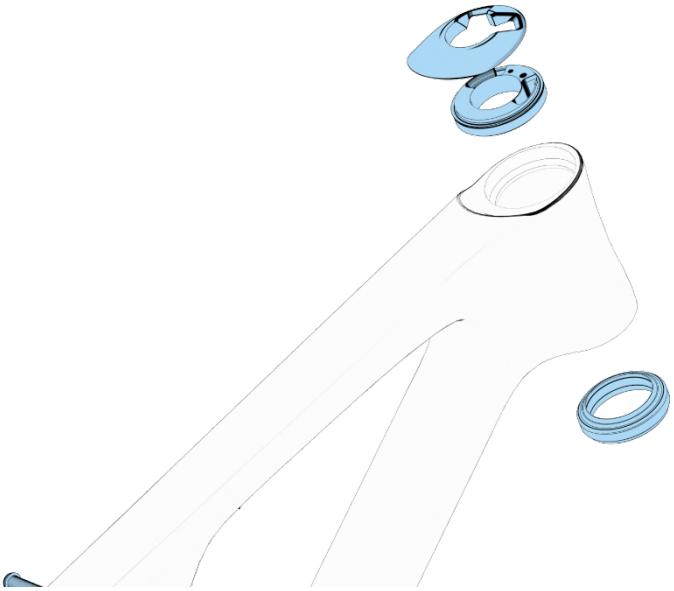

Pos.	Description	Part. No.
1	Evolve FS Headset Cover	Acros 300.52.0146
2	Acros Headset	320.52.531R1

Follow Acros' instructions for headset assembly.

Slider and shock installation

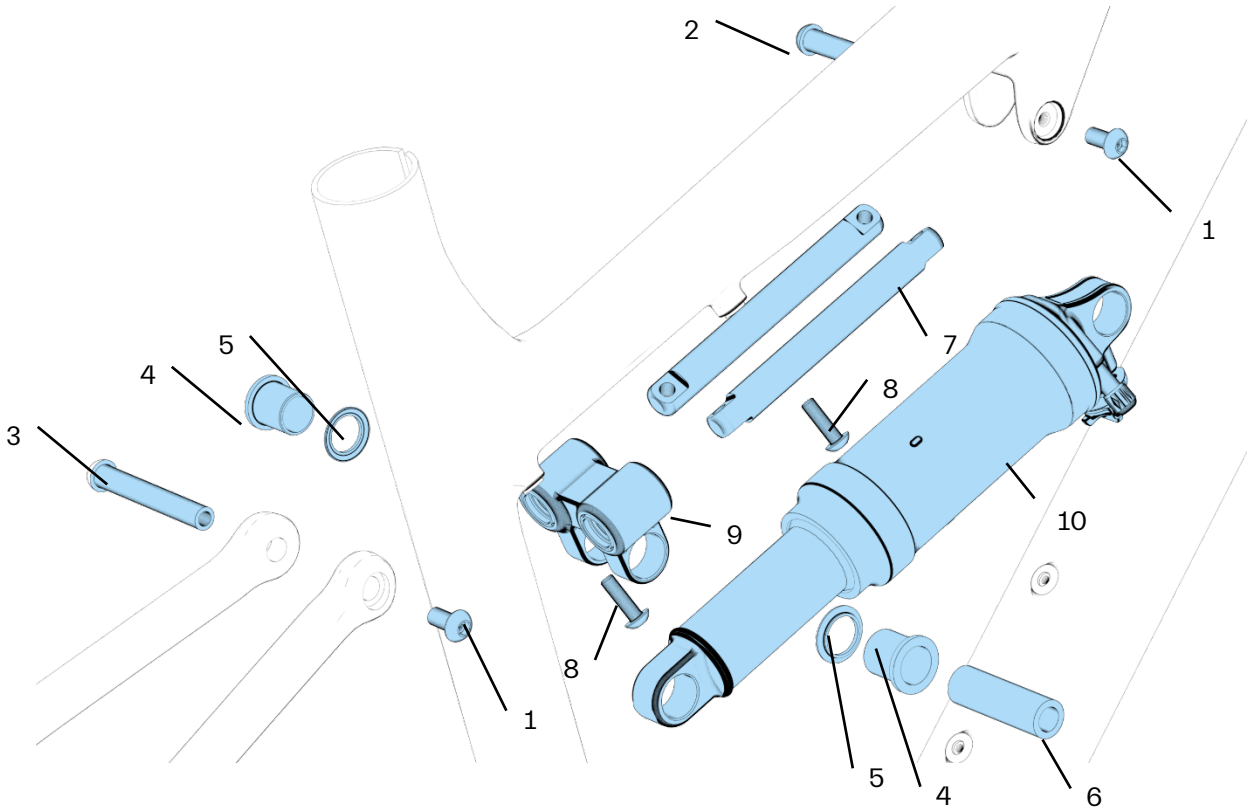

Pos.	Description	Part No.	Torque	Note
1	Button Head Bolt M6 x 12		6 Nm	Use thread locker
2	Evolve FS Shock Axle Front		6 Nm	
3	Evolve FS Shock Axle Rear		6 Nm	
4	Evolve FS Shock Bushing			
5	Evolve FS Slider Spacer			
6	Evolve FS Shock Pin			
7	Evolve FS Slider Rail			
8	Button Head Bolt M5 x 16		5 Nm	Use thread locker
9	Evolve FS Slider Housing Unit			
10	Shock			

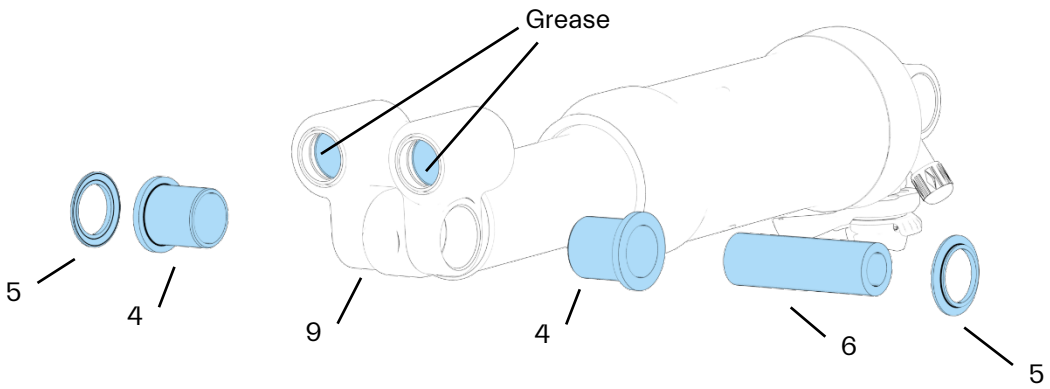

Apply grease to the two bushings inside the slider unit (9). Place the shock in the slider housing unit and press in the two shock bushings (4). Push the shock pin (6) through the bushings and place the slider spacers (5) on the pin, outside of the slider housing.

Place the shock (10) in the frame and fix it there using the shock axle (2). No need to tighten it yet. Slide the two rails (7) through the slider housing and attach them to the frame using the two bolts (8) close to the seat tube. Just tighten them lightly. Now remove the shock axle (2) and slide the slider housing towards the front. Tighten the two bolts (8) in front to 5 Nm. Move the slider back to the rear and tighten the two bolts (8) near the seat tube to 5 Nm. Make sure the slider housing can be moved by hand using little force. Leave it roughly in the middle of the rails. With the two spacers (5) in place, align the swingarm with the slider housing and install the rear shock axle (3), tightening it to 6 Nm. Now push the slider housing towards the seat tube and install the front shock axle (2), tightening it to 6 Nm.

If the rails show signs of wear, replace them and the slider housing unit.

Main pivot

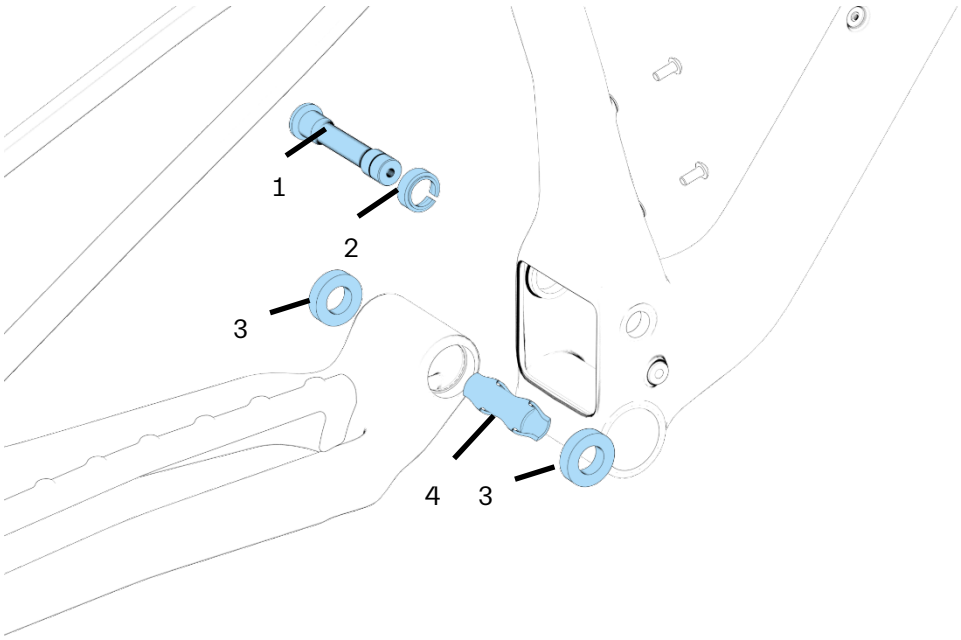

Pos.	Description	Part No.	Torque
1	Main Pivot Axle		25 Nm
2	Split Ring		
3	Bearing 6902		
4	Bearing Spacer		

Before working on the main pivot, remove the front shock bolt, and move the slider roughly into the middle of the rails.

To disassemble, remove the axle (1) on the non-drive side using an 8 mm allen key, and the split ring (2). Now you can pull the swingarm out of the front triangle.

The bearing spacer (4) has cutouts so you can knock the bearings (3) out using a punch. Make sure to do this evenly so not to damage the bearing seats.

Before pressing in new bearings, apply grease to the bearing seats and make sure the bearing spacer sits in between the two bearings.

To assemble, apply some grease onto the thread of the axle (1) and the contact surface between axle and split ring (2). Put the split ring over the axle. Make sure the bearing spacer (4) is aligned with the bearings (3), and position the swingarm in the front triangle. Slide the axle through the assembly.

RD hanger and thru axle

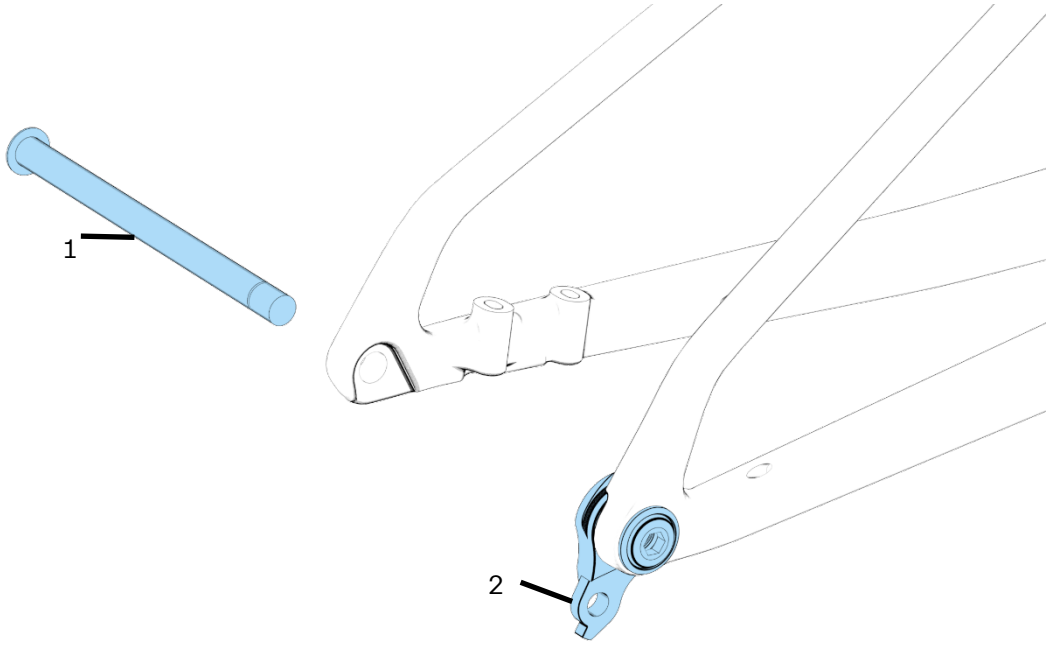

Pos.	Description	Part No.	Torque
1	UDH Thru Axle		10 Nm
2	Sram UDH		10 Nm

Follow SRAM's instructions for installation.

Bottle cage

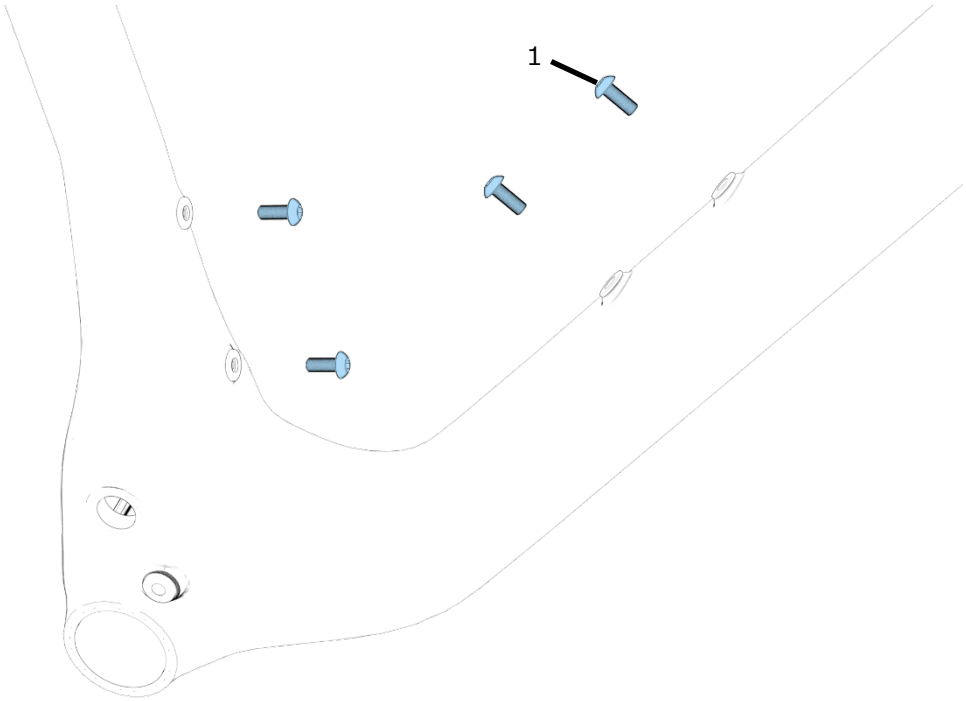

Pos.	Description	Part No.	Torque
1	Bottle Cage Bolt		5 Nm

The Evolve FS provides space for two bottle cages, one on the seat tube, one on the down tube.

Chainstay protection

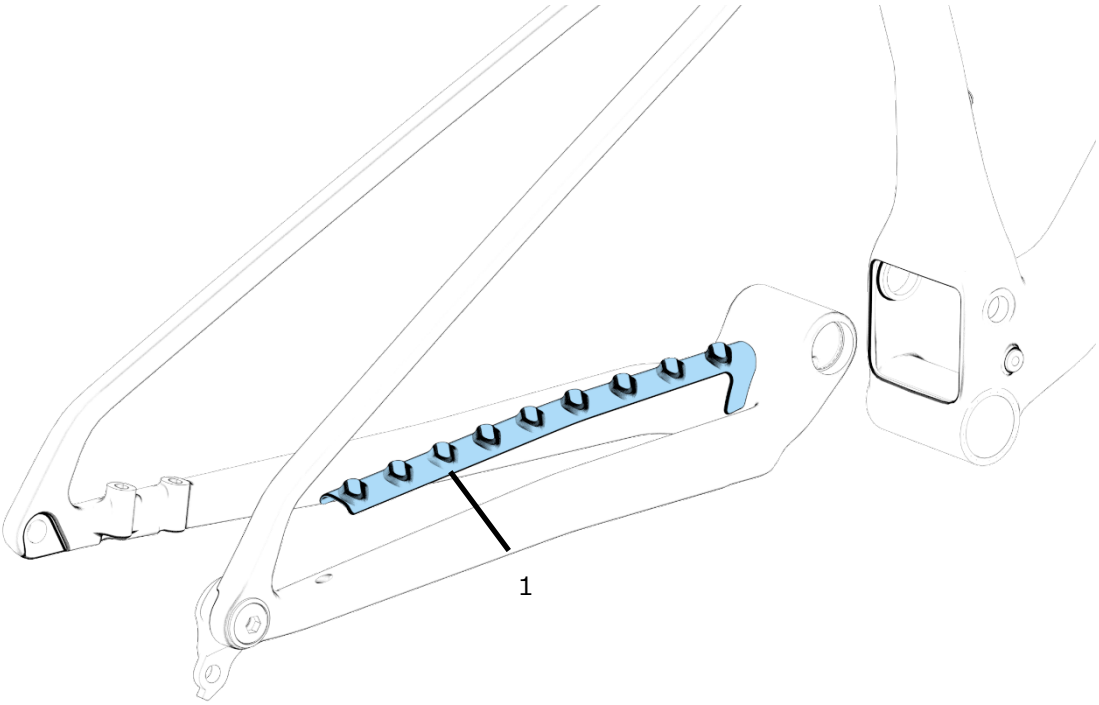

Pos.	Description	Part No.
1	Evolve FS Chainstay Protection	

The Evolve FS comes with a ribbed chainstay. Before applying it, clean the frame with an alcohol wipe.

Maintenance

After every ride: check that all bolts are tightened to the specified torque. Clean the bike and inspect for any visible damage. Make sure there is no play in the headset.
Every 1000 km: Remove the fork and inspect for any visible damage on the steerer tube and crown area. Externally clean and re-grease headset bearings.

ARC8

Parts compatibility table

Part	Specification	Comment
Brake	Flatmount 160mm	No adaptor needed for 160 mm rotors. 180 mm rotor with adaptor.
Tires	29 x 2.4” max	Because tire width varies with rim width and manufacturers, make sure there is at least 6 mm of clearance all around the tire.
Seat post	Ø30.9	
Seat post clamp	Ø34.9	
Headset	Acros	Part no. 320.52.531R1
BB	BSA 73	
Chainring	38 T max	55 mm chainline
Chainguide	77designz Freesolo V2-05+BSA	
Fork	100 -120 mm travel, 1.5-1 1/8” tapered	Check clearance between adjuster nobs/crown and down tube.

Weight limit

This frame is designed and tested for a maximum total weight (rider plus bike plus equipment) of 110 kg.